# C E R T I F I C A T E

## EU Type-Examination Certificate
## Regulation 2016/425/EU
## Personal Protective Equipment

**Registration No.:** BP 50418342 0001

**Report No.:** 16064692 005

**Holder:**
Zhao Qing Bo Han Sports Company Ltd.
No. 2-1, Kang Tai Street
High-tech Zone
Zhaoqing City, Guangdong Province
P. R. China

**Product:**
Bicycle Helmet
(acc. to EN 1078:2012+A1)

**Identification:**

| Designation: | Size: [cm] | Weight: [g ±5%] |
|---|---|---|
| HB3-5 | 48-53 | 212 |
| | 53-55 | 242 |
| | 55-58 | 274 |
| | 59-61 | 297 |

The EU type-examination certificate refers to the above mentioned product. This is to certify that the product complies with the essential requirements of Annex II of the regulation 2016/425/EU. This certificate does not imply assessment of the production of the product and does not permit the use of a TÜV Rheinland mark of conformity. The holder is entitled touse this certificate in connection with the declaration of conformity in accordance with Annex IX.

Valid till: 01.10.2023

Notified Body

Date 02.10.2018

Dipl.-Ing. B. Hendel

TÜV Rheinland LGA Products GmbH - Tillystraße 2 - 90431 Nürnberg
Accredited by Zentralstelle der Länder für Sicherheitstechnik (ZLS).
Notified under No. 0197 to the EC Commission.

CE The CE marking may be used if all relevant and effective EC Directives are complied with. CE

10/020 h 04.08 ® TÜV, TÜEV and TÜV are registered trademarks. Utilisation and application requires prior approval.

| | | | | |
|---|---|---|---|---|
| **Prüfbericht-Nr.:** *Test Report No.:* | **16064692 005** | **Auftrags-Nr.:** *Order No.:* | 174089893 | Seite 1 von 16 *Page 1 of 16* |
| **Kunden-Referenz-Nr.:** *Client Reference No.:* | N/A | **Auftragsdatum:** *Order date:* | 24.07.2018 | |
| **Auftraggeber:** *Client:* | Zhao Qing Bo Han Sports Company Ltd. / No. 2-1, Kang Tai Street, High-tech Zone, Zhaoqing City, Guangdong Province, P.R. China | | | |
| **Prüfgegenstand:** *Test item:* | Helme für Radfahrer und für Benutzer von Skateboards und Rollschuhen/ Helmets for pedal cyclists and for users of skateboards and roller skates | | | |
| **Bezeichnung / Typ-Nr.:** *Identification / Type No.:* | HB3-5 | | | |
| **Auftrags-Inhalt:** *Order content:* | EC type examination test | | | |
| **Prüfgrundlage:** *Test specification:* | EN 1078: 2012+A1:2012<br>Helme für Radfahrer und für Benutzer von Skateboards und Rollschuhe<br>*Helmets for pedal cyclists and for users of skateboards and roller skates* | | | |

TÜV RHEINLAND (GUANGDONG) LTD. TÜVRheinland

| | |
|---|---|
| **Wareneingangsdatum:** *Date of receipt:* | 24.07.2018 |
| **Prüfmuster-Nr.:** *Test sample No.:* | Engineering sample |
| **Prüfzeitraum:** *Testing period:* | 31.07.2018 - 31.07.2018 |
| **Ort der Prüfung:** *Place of testing:* | TÜV Rheinland ( Guangdong) Ltd. |
| **Prüflaboratorium:** *Testing laboratory:* | TÜV Rheinland ( Guangdong) Ltd. |
| **Prüfergebnis*:** *Test result*:* | Pass |

| **geprüft von** / *tested by:* | | | **kontrolliert von** / *reviewed by:* | | |
|---|---|---|---|---|---|
| 2018-09-19 | Jason Pang / Project Expert | | 2018-10-02 | Brigitte Hendel / Techincal Certifier | |
| **Datum** *Date* | **Name / Stellung** *Name / Position* | **Unterschrift** *Signature* | **Datum** *Date* | **Name / Stellung** *Name / Position* | **Unterschrift** *Signature* |

**Sonstiges** / *Other:*

HB3-5 sizes (cm): 48-53 CM, 53-55 CM, 55-58 CM, 59-61 CM EPS: black

1. Product is tested according to European harmonized standards.
Attachment 1: Equipment list of TUV Rheinland (Guangdong) Ltd. Guangzhou Helmet Lab.

**Zustand des Prüfgegenstandes bei Anlieferung:** Prüfmuster vollständig und unbeschädigt
*Condition of the test item at delivery:* *Test item complete and undamaged*

| | | | | | |
|---|---|---|---|---|---|
| * Legende: | 1 = sehr gut | 2 = gut | 3 = befriedigend | 4 = ausreichend | 5 = mangelhaft |
| | P(ass) = entspricht o.g. Prüfgrundlage(n) | | F(ail) = entspricht nicht o.g. Prüfgrundlage(n) | N/A = nicht anwendbar | N/T = nicht getestet |
| *Legend:* | *1 = very good* | *2 = good* | *3 = satisfactory* | *4 = sufficient* | *5 = poor* |
| | *P(ass) = passed a.m. test specification(s)* | | *F(ail) = failed a.m. test specification(s)* | *N/A = not applicable* | *N/T = not tested* |

**Dieser Prüfbericht bezieht sich nur auf das o.g. Prüfmuster und darf ohne Genehmigung der Prüfstelle nicht auszugsweise vervielfältigt werden. Dieser Bericht berechtigt nicht zur Verwendung eines Prüfzeichens.**
*This test report only relates to the a. m. test sample. Without permission of the test center this test report is not permitted to be duplicated in extracts. This test report does not entitle to carry any test mark.*

V04

**Prüfbericht-Nr.: 16064692 005**
*Test Report No.:*



## Liste der verwendeten Prüfmittel
## *List of used test equipment*

| **Prüfmittel**<br>*Test equipment* | **Prüfmittel-Nr. / ID-Nr.**<br>*Equipment No. / ID-No.* | **Nächste Kalibrierung**<br>*Next calibration* |
|---|---|---|
| Refer to the attached equipment list. | | |
| | | |
| | | |
| | | |
| | | |
| | | |
| | | |
| | | |
| | | |
| | | |
| | | |
| | | |
| | | |
| | | |
| | | |
| | | |
| | | |
| | | |
| | | |
| | | |
| | | |
| | | |
| | | |
| | | |
| | | |
| | | |

**Prüfbericht-Nr.: 16064692 005**
*Test Report No.:*



## Produktbeschreibung
## *Product description*

| | | |
|---|---|---|
| 1 | **Produktdetails**<br>*Product details* | **HB3-5** |
| 2 | **Maße / Gewicht**<br>*Dimensions / Weight* | HB3-5, 48-53CM, 190g-230g / 53-55CM, 220g-260g<br>HB3-5, 55-58CM, 250g-290g / 59-61CM, 280g-320g |
| 3 | **Bedienelemente**<br>*Operating elements* | See CDF |
| 4 | **Ausstattung / Zubehör**<br>*Equipment / Accessories* | See CDF |
| 5 | **Verwendete Materialien**<br>*Used materials* | See CDF |
| 6 | **Sonstiges**<br>*Other* | NONE |

HB3-5 Stoßdämpfungspunkte / *Impact points*

HB3-5 Seitenansicht / *Side view*

HB3-5 Innenansicht / *Interior side*

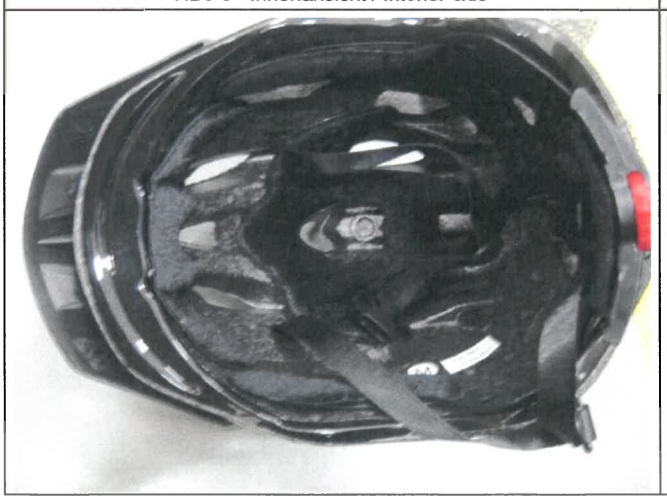

HB3-5 Verschlusssystem / *Closure system*

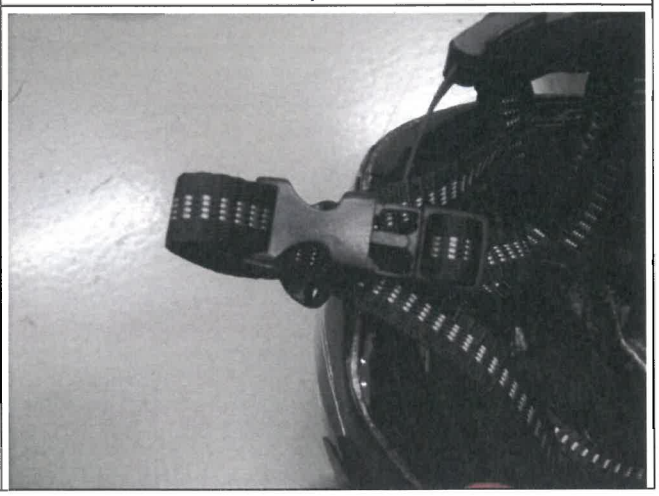

| Absatz<br>*Clause* | **EN 1078: 2012+A1:2012**<br>Anforderungen - Prüfungen / *Requirements - Tests* | Messergebnisse - Bemerkungen<br>*Measuring results - Remarks* | Bewertung<br>*Evaluation* |
|---|---|---|---|
| **1** | **Anwendungsbereich**<br>***Scope*** | | |
| | Diese Europäische Norm legt Anforderungen und Prüfverfahren für Helme fest, die durch Benutzer von Fahrrädern, Skateboards und Rollschuhen getragen werden.<br>Die Anforderungen und die entsprechenden Prüfverfahren beziehen sich auf folgende Punkte:<br>- Konstruktion, einschließlich Sichtfeld;<br>- stoßdämpfende Eigenschaften;<br>- Eigenschaften der Trageeinrichtung, einschließlich Kinnriemen, und Befestigungsvorrichtungen;<br>- Kennzeichnung und Information.<br><br>*This European Standard specifies requirements and test methods for helmets worn by users of pedal cycles, skateboards and roller skates.*<br>*Requirements and the corresponding methods of test are given for the following:*<br>*- construction including field of vision;*<br>*- shock absorbing properties;*<br>*- retention system properties, including chin strap and fastening devices;*<br>*- marking and information.* | | |
| **2** | **Normative Verweisungen**<br>***Normative references*** | | |
| | siehe EN 1078:2012+A1:2012<br>*see EN 1078:2012+A1:2012* | | |
| **3** | **Begriffe**<br>***Terms and definitions*** | | |
| | siehe EN 1078:2012+A1:2012<br>*see EN 1078:2012+A1:2012* | | |

TÜV RHEINLAND (GUANG DONG) LTD. TÜVRheinland

| Absatz | EN 1078: 2012+A1:2012 | Messergebnisse - Bemerkungen | Bewertung |
|---|---|---|---|
| *Clause* | Anforderungen - Prüfungen / *Requirements - Tests* | *Measuring results - Remarks* | *Evaluation* |
| **4** | **Anforderungen**<br>***Requirements*** | | |
| **4.1** | **Werkstoffe**<br>***Materials*** | | |
| | Für alle Teile des Helmes, die mit der Haut in Berührung kommen, sind Werkstoffe zu verwenden, die sich durch Kontakt mit Schweiß oder kosmetischen Produkten nicht merklich verändern. Ferner dürfen keine Werkstoffe verwendet werden, von denen bekannt ist, dass sie Hautreizungen verursachen.<br><br>*For those parts of the helmet coming into contact with the skin, the material used should be known not to undergo appreciable alteration from contact with sweat or with substances likely to be found in toiletries. Materials shall not be used which are known to cause skin disorders.* | Der Helm ist aus herkömmlichen Materialien gefertigt worden, von denen nicht bekannt ist, dass sie zu Hautirritationen führen oder gesundheitsschädlich sind (siehe Herstellererklärung).<br><br>The helmet is manufactured from traditional materials which are not known to cause skin disorders or which are unhealthy (pls. see declaration of the manufacturer). | P ☒<br>F ☐<br>N/A ☐<br>N/T ☐ |
| **4.2** | **Konstruktion**<br>***Construction*** | | |
| | Der Helm besteht in der Regel aus einer Vorrichtung, die die Mittel zur Dämpfung der Aufprallenergie enthält, und aus Vorrichtungen, die den Helm bei einem Unfall auf dem Kopf des Trägers festhalten. Der Helm sollte ausreichend fest sein und dem Gebrauch standhalten. Der Helm muss so ausgeführt und geformt sein, dass kein Teil davon (Visier, Nieten, Belüftungen, Kanten, Befestigungsvorrichtungen und dergleichen) den Benutzer bei üblichem Gebrauch verletzt.<br><br>ANMERKUNG:<br><br>Helme sollten:<br>- wenig Gewicht haben;<br>- belüftet sein;<br>- leicht aufzusetzen und abzunehmen sein;<br>- zusammen mit Brillen getragen werden können;<br>- das Hörvermögen des Benutzers hinsichtlich Verkehrsgeräuschen nicht wesentlich beeinträchtigen. | Der Helm ist so ausgeführt und geformt, dass kein Teil davon den Benutzer bei üblichem Gebrauch verletzt und die o.g. Anforderungen erfüllt.<br><br>TÜV RHEINLAND (GUANG DONG) LTD. TÜVRheinland | |

| Absatz<br>*Clause* | **EN 1078: 2012+A1:2012**<br>Anforderungen - Prüfungen / *Requirements - Tests* | Messergebnisse - Bemerkungen<br>*Measuring results - Remarks* | Bewertung<br>*Evaluation* |
|---|---|---|---|
| | *The helmet normally consists of a means of absorbing impact energy and means of retaining the helmet on the head in an accident. The helmet should be durable and withstand handling.*<br>*The helmet shall be so designed and shaped that parts of it (visor, rivets, ventilators, edges, fastening device and the like) are not likely to injure the user in normal use.*<br><br>*NOTE:*<br><br>*Helmets should:*<br>*- have low weight;*<br>*- be ventilating;*<br>*- be easy to put on and take off;*<br>*- be usable with spectacles;*<br>*- not significantly interfere with the ability of the user to hear traffic noise.* | The helmet is so designed and shaped that parts of it are not likely to injure the user in normal use and fulfils the a.m. requirements. | P ☒<br>F ☐<br>N/A ☐<br>N/T ☐ |
| **4.3** | **Sichtfeld**<br>***Field of vision*** | | |
| | Bei der Prüfung nach EN 1078, 5.7 darf keine Sichtbehinderung in dem Sichtfeld auftreten, das mit folgenden Winkeln begrenzt ist:<br>- in der Horizontalen: min. 105° von der vertikalen Längs-Mittelebene nach links und rechts;<br>- nach oben: min. 25° von der Bezugsebene;<br>- nach unten: min. 45° von der Basisebene.<br><br>*When tested in accordance with EN 1078, 5.7 there shall be no occultation in the field of vision bounded by angles as follows:*<br>*- horizontally: min. 105° from the longitudinal vertical median plane to the left and right hand sides;*<br>*- upwards: min. 25° from the reference plane;*<br>*- downwards: min. 45° from the basic plane.* | Das Sichtfeld wird nicht eingeschränkt (Prüfprotokolle als Anlagen zum Bericht).<br><br>There is no occultation in the field of vision (test records as annexes to the report). | P ☒<br>F ☐<br>N/A ☐<br>N/T ☐ |

| Absatz | EN 1078: 2012+A1:2012 | Messergebnisse - Bemerkungen | Bewertung |
|---|---|---|---|
| *Clause* | Anforderungen - Prüfungen / *Requirements - Tests* | *Measuring results - Remarks* | *Evaluation* |

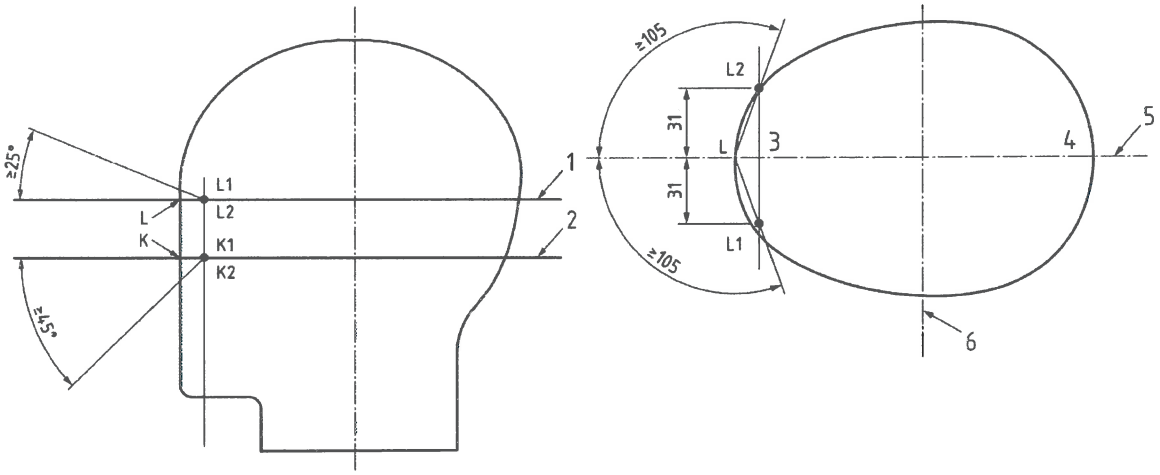


a) Schnitt des Prüfkopfes in vertikaler Längsebene

*a) Section of headform in longitudinal vertical plane*

b) Schnitt des Prüfkopfes in der Bezugsebene

*b) Section of headform in reference plane*

Legende 1 Bezugsebene, 2 Basisebene, 3 Vorderseite, 4 Hinterseite, 5 vertikale Längs-Mittelebene 6 vertikale Quer-Mittelebene

ANMERKUNG 1 Vertikale Längs-Mittelebene – entspricht EN 960:2006, 2.8, „vertikale Längsebene".
ANMERKUNG 2 Vertikale Quer-Mittelebene – entspricht EN 960:2006, 2.9, „vertikalen Querebene".

*Key1 reference plane, 2 basic plane,3 front, 4 back, 5 longitudinal vertical median plane 6 central transverse vertical plane*

*NOTE 1 Longitudinal vertical median plane – equivalent to EN 960:2006, 2.8 "vertical longitudinal plane".*
*NOTE 2 Central transverse vertical plane – equivalent to EN 960:2006, 2.9 "vertical transverse plane".*

TÜV RHEINLAND (GUANG DONG) LTD. TÜVRheinland

| Absatz | EN 1078: 2012+A1:2012 | Messergebnisse - Bemerkungen | Bewertung |
|---|---|---|---|
| *Clause* | Anforderungen - Prüfungen / *Requirements - Tests* | *Measuring results - Remarks* | *Evaluation* |
| **4.4** | **Stoßdämpfungsvermögen**<br>***Shock absorbing capacity*** | | |
| | Der Helm muss die Stirn, den Hinterkopf, die Seiten, die Schläfen und den Oberkopf des Benutzers schützen. Bei der Prüfung nach EN 1078, 5.3 und 5.4 darf die Maximalbeschleunigung bei jedem Aufprall höchstens 250 g mit einer Geschwindigkeit von (5,42 +0,10 ) m/s auf einen flachen Sockel und (4,57 +0,10) m/s auf einen Bordstein betragen.<br>ANMERKUNG: Dies entspricht theoretisch einer Fallhöhe von 1497 mm beziehungsweise 1064 mm.<br><br>*The helmet shall give protection to the forehead, rear, sides, temples and crown of the head.*<br>*When tested in accordance with EN 1078, 5.3 and 5.4 the peak acceleration shall not, for each impact, exceed 250 g for the velocity of (5,42 +0,10) m/s on the flat anvil, and (4,5 +0,10) m/s on the kerbstone anvil.*<br>*NOTE: These are theoretically equivalent to 1497 mm and 1064 mm drop heights respectively.*<br> 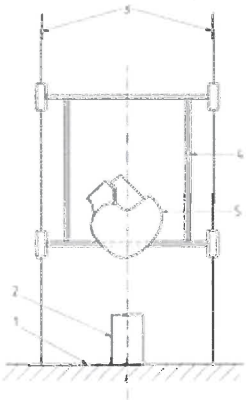 | Kein Messwert übersteigt den Grenzwert von 250 g (Prüfprotokolle als Anlage zum Bericht).<br><br>No single value exceeds the limit of 250 g (test records as annex to the report). | P ☒<br>F ☐<br>N/A ☐<br>N/T ☐ |
| **4.5** | **Haltbarkeit**<br>***Durability*** | | |
| | Nach der Prüfung darf der Helm keine Beschädigung aufweisen, die eine bedeutsame Verletzung des Trägers verursachen könnte (scharfe Kanten, Stellen).<br><br>*After being tested the helmet shall not exhibit damage that could cause significant injury to the wearer (sharp edges, points).* | Nach den Prüfungen waren keine Beschädigungen feststellbar, die zu bedeutsamen Verletzungen des Benutzers führen könnten.<br><br>After the tests no damages could be found which could cause significant injury to the wearer. | P ☒<br>F ☐<br>N/A ☐<br>N/T ☐ |

| Absatz<br>*Clause* | **EN 1078: 2012+A1:2012**<br>Anforderungen - Prüfungen / *Requirements - Tests* | Messergebnisse - Bemerkungen<br>*Measuring results - Remarks* | Bewertung<br>*Evaluation* |
|---|---|---|---|
| **4.6** | **Trageeinrichtung**<br>***Retention system*** | | |
| **4.6.1** | **Allgemeines**<br>***General*** | | |
| | Es müssen Einrichtungen vorhanden sein, die den Helm auf dem Kopf des Trägers halten. Alle Teile der Trageeinrichtung müssen sicher mit dem Helm verbunden sein.<br><br>*Means shall be provided for retaining the helmet on the wearer's head. All parts of the retention system shall be securely attached to the helmet.* | Alle Helme sind mit einer fest installierten Trageeinrichtung und mit einem Öffnungs-mechanismus ausgestattet.<br><br>All helmets are equipped with a fix installed retention system and with an opening mechanism. | P ☒<br>F ☐<br>N/A ☐<br>N/T ☐ |
| **4.6.2** | **Kinnriemen**<br>***Chin strap*** | | |
| | Der Kinnriemen darf keine Kinnschale enthalten. Kinnriemen müssen min. 15 mm breit sein. Kinnriemen können mit Vorrichtungen versehen sein, die den Tragekomfort für den Benutzer erhöhen.<br><br>*The chin strap shall not include a chin cup. Any chin strap shall be not less than 15 mm wide. Chin straps may be fitted with means of enhancing comfort for the wearer.* | Es ist keine Kinnschale vorhanden. Die Kinnriemen-breite beträgt min. 15 mm (Prüfprotokolle als Anlage zum Bericht).<br><br>The chin strap does not include a chin cup. The width of the chin strap is min. 15 mm (test records as annex to the report). | P ☒<br>F ☐<br>N/A ☐<br>N/T ☐ |

TÜV RHEINLAND (GUANG DONG) LTD. TÜVRheinland

| Absatz | EN 1078: 2012+A1:2012 | Messergebnisse - Bemerkungen | Bewertung |
|---|---|---|---|
| *Clause* | Anforderungen - Prüfungen / *Requirements - Tests* | *Measuring results - Remarks* | *Evaluation* |
| **4.6.3** | **Befestigungseinrichtungen**<br>***Fastening device*** | | |
| | Trageeinrichtungen müssen mit einer Vorrichtung versehen sein, mit der die Spannung der Trageeinrichtung eingestellt und beibehalten wird. Die Vorrichtung muss verstellbar sein, so dass das Schloss nicht auf dem Unterkieferknochen aufliegt.<br><br>*Any retention system shall be fitted with a device to adjust and maintain tension in the system. The device shall be capable of adjustment so that the buckle does not sit on the jawbone.* | Die Trageeinrichtung ist verstellbar, so dass sie sich der Ergonomie des Benutzers anpassen lässt.<br><br>The retention system is adjustable so that it can be fitted to the user's ergonomics. | P ☒<br>F ☐<br>N/A ☐<br>N/T ☐ |
| **4.6.4** | **Farbe**<br>***Colour*** | | |
| | Kein Teil der Trageeinrichtung darf die Farbe Grün haben.<br>ANMERKUNG: Es wird empfohlen, den Öffnungsmechanismus rot oder orange zu kennzeichnen.<br><br>*No part of the retention system shall be coloured green.*<br>*NOTE: It is recommended that the opening mechanism be marked with red or orange colour.* | Kein Teil der Trageeinrichtung ist grün.<br><br>No part of the retention system it is green.<br><br>TÜV RHEINLAND (GUANG DONG) LTD. TÜVRheinland | P ☒<br>F ☐<br>N/A ☐<br>N/T ☐ |

| Absatz | EN 1078: 2012+A1:2012 | Messergebnisse - Bemerkungen | Bewertung |
|---|---|---|---|
| *Clause* | Anforderungen - Prüfungen / *Requirements - Tests* | *Measuring results - Remarks* | *Evaluation* |
| **4.6.5** | **Festigkeit**<br>***Strength*** | | |
| | Bei der Prüfung nach EN 1078, 5.5 darf die dynamische Dehnung der Trageeinrichtung max. 35 mm und die bleibende Dehnung max. 25 mm betragen. Für diesen Fall schließt die Dehnung den Schlupf der Befestigungsvorrichtung mit ein. Beschädigungen der Trageeinrichtung sind zulässig, sofern diese Anforderungen erfüllt sind.<br><br>ANMERKUNG: In dieser Prüfeinrichtung kann der Schlupf der Befestigungsvorrichtung unabhängig von anderen Faktoren, die eine Dehnung bewirken, gemessen und aufgezeichnet werden. Diese Angabe dient jedoch nur zur Information und ist nicht Gegenstand einer separaten Anforderung.<br><br>*When tested in accordance with EN 1078, 5.5, the dynamic extension of the retention system shall not exceed 35 mm and the residual extension shall not exceed 25 mm. For this purpose, extension includes slippage of the fastening device. Damage to the retention system shall be accepted provided that the above requirements are met.*<br><br>*NOTE: In this test slippage of the fastening device can be measured and recorded separately from other contributions to the extension but this is for information only and is not subject to a separate requirement.* | Die ermittelten Messwerte erfüllen die Anforderungen (Prüfprotokolle als Anlage zum Bericht).<br><br>The measured values fulfil the requirements (test records as annex to the report). | P ☒<br>F ☐<br>N/A ☐<br>N/T ☐ |

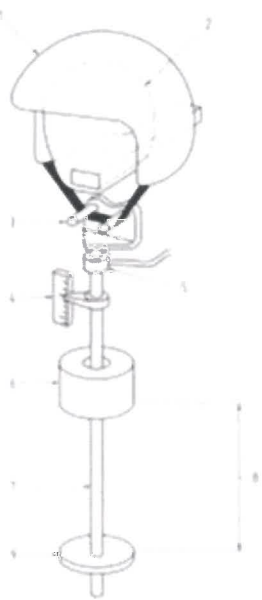

Bild 4 — Beispiel einer Einrichtung zur Prüfung der Festigkeit der Trageeinrichtung

*Figure 4 — Example of an apparatus for testing of retention system strength*

Legende
1 Helm; 2 Prüfkopf; 3 Kinnriemenbügel; 4 Dehnungsmessgerät
5 Belastungselement (wahlweise); 6 Fallgewicht; 7 Führungsschiene
8 Fallhöhe 600 mm ± 5 mm ; 9 Stopsockel

*Key*
*1 helmet; 2 headform; 3 chin strap atirrup; 4 extension measuring device*
*5 load cell (optional); 6 drop weight 4 kg ± 0,2 kg; 7 guide bar*
*8 drop height 600 mm ± 5 mm9 stop anvil*

TÜV RHEINLAND (GUANG DONG) LTD. TÜVRheinland

| Absatz<br>*Clause* | **EN 1078: 2012+A1:2012**<br>Anforderungen - Prüfungen / *Requirements - Tests* | Messergebnisse - Bemerkungen<br>*Measuring results - Remarks* | Bewertung<br>*Evaluation* |
|---|---|---|---|
| **4.6.6** | **Wirksamkeit**<br>***Effectiveness*** | | |
| | Bei der Prüfung nach EN 1078, 5.6 darf der Helm nicht vom Prüfkopf abgleiten.<br>*When tested in accordance with EN 1078, 5.6 the helmet shall not come off the headform.*<br> 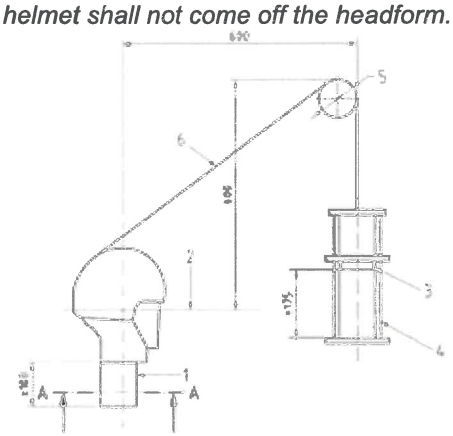 <br>Bild 5 — Einrichtung zur Prüfung der Wirksamkeit der Trageeinrichtung<br>*Figure 5 — Apparatus for testing of the retention system effectiveness*<br>Legende<br>1 Fundament; 2 Bezugsebene; 3 Fallgewicht, Masse 10 kg; 4 Führungseinrichtung, Masse 3 kg;<br>5 Umlenkrolle Ø 100 mm; 6 flexibles Band ≥ Ø 3 mm<br>*Key*<br>*1 base; 2 reference plane; 3 drop weight mass 10 kg*<br>*4 guiding system mass 3 kg; 5 pulley Ø 100 mm*<br>*6 flexible strap ≥ Ø 3 mm* | Die Helme verbleiben auf dem Prüfkopf (Prüfprotokolle als Anlage zum Bericht).<br>The helmets do not come off the test headform (test records as annex to the report). | P ☒<br>F ☐<br>N/A ☐<br>N/T ☐ |
| **4.6.7** | **Leichtigkeit des Öffnens**<br>***Ease of release*** | | |
| | Bei der Prüfung der Festigkeit nach EN 1078, 5.5 muss es bei der Beanspruchung möglich sein, das Öffnungssystem mit einer Hand zu öffnen.<br>*Following the strength test in accordance with EN 1078, 5.5 and with the load still applied, it shall be possible to open the release system with one hand.* | Das Schloss lässt sich unter Beanspruchung problemlos öffnen (Prüfprotokolle als Anlage zum Bericht).<br>The buckle can be released single handed with the load still applied (test records as annex to the report). | P ☒<br>F ☐<br>N/A ☐<br>N/T ☐ |
| **5** | **Prüfungen**<br>***Testing*** | | |
| | siehe EN 1078:2012+A1:2012<br>*see EN 1078:2012+A1:2012* | | |

| Absatz | EN 1078: 2012+A1:2012 | Messergebnisse - Bemerkungen | Bewertung |
|---|---|---|---|
| *Clause* | Anforderungen - Prüfungen / *Requirements - Tests* | *Measuring results - Remarks* | *Evaluation* |

| | | | |
|---|---|---|---|
| **6** | **Kennzeichnung**<br>***Marking*** | | |
| | Jeder Helm muss so gekennzeichnet sein, dass die folgenden Angaben deutlich sichtbar angebracht sind und diese während der Lebensdauer des Helmes auch lesbar bleiben:<br><br>a) Nummer dieser Europäischen Norm;<br>b) Name oder Zeichen des Herstellers;<br>c) Modellbezeichnung;<br>d) Bezeichnung, die aus einer oder mehreren der folgenden bestehen muss:<br>Helm für Radfahrer, Skateboardfahrer und Rollschuhfahrer;<br>e) Größe oder Größenbereich des Helmes, angegeben als Umfang (in Zentimeter) des Kopfes, für den der Helm passen soll;<br>f) Gewicht des Helmes (durchschnittliche Masse in Gramm, ermittelt nach EN 1078, 5.2);<br>g) Herstellerjahr und Quartal;<br>h) Den folgenden Text:<br>„Warnhinweis! Dieser Helm sollte nicht durch Kinder beim Klettern oder anderen Aktivitäten verwendet werden, wenn ein Risiko besteht, sich zu strangulieren/hängen, falls sich das Kind mit dem Helm verfängt."<br>Zusätzlich muss der Helm einen entsprechenden Warnhinweis tragen, falls Teile aus einem Werkstoff hergestellt sind, der bekanntermaßen bei Berührung mit Kohlenwasserstoffen, Reinigungsflüssigkeiten, Farben, Abziehbildern oder anderen äußeren Einflussfaktoren nachteilig beeinflusst wird.<br>Wenn eine Verpackung für den Verkauf an den Verbraucher vorhanden ist, müssen die Informationen nach a), b), d) und h) auch auf dieser Verpackung angegeben werden. Der Text muss die Mindestschriftgröße 12 haben.<br><br>*Each helmet shall be marked in such a way that the following information is easily legible by the user and is likely to remain legible throughout the life of the helmet:*<br><br>*a) number of this European standard;*<br>*b) name or trademark of the manufacturer;*<br>*c) designation of the model;*<br>*d) designation, which shall be one or more of the following:*<br>*Helmet for pedal cyclists, skateboarders or roller skaters;*<br>*e) size or size range of the helmet, quoted as the circumference (in centimetres) of the head which the helmet is intended to fit;*<br>*f) weight of the helmet (the average mass in g determined according to EN 1078, 5.2);*<br>*g) year and quarter of manufacture;*<br>*h) the following text:*<br>*"WARNING!. This helmet should not be used by children while climbing or doing other activities when there is a risk of strangulation/hanging if the child gets trapped with the helmet."*<br>*In addition, if the helmet has components made of material which are known to be adversely affected by contact with hydrocarbons, cleaning fluids, paints, transfers or other extraneous additions, the helmet shall carry an appropriate warning. If there is a consumer sales packaging, the information specified in a), b), d) and h) shall also be given on that package. The text shall be of minimum font size 12.* | | |
| | | Die Kennzeichnung entspricht den Anforderungen (s. Beispiel in der internen TÜV-Akte).<br><br>The marking meets the requirements (see example in the internal TÜV file). | P ☒<br>F ☐<br>N/A ☐<br>N/T ☐ |

TÜV RHEINLAND (GUANG DONG) LTD. TÜVRheinland

| Absatz | EN 1078: 2012+A1:2012 | Messergebnisse - Bemerkungen | Bewertung |
|---|---|---|---|
| *Clause* | Anforderungen - Prüfungen / *Requirements - Tests* | *Measuring results - Remarks* | *Evaluation* |

| | | | |
|---|---|---|---|
| **7** | **Informationsbroschüre des Herstellers**<br>***Information supplied by the manufacturer*** | | |
| | Mit jedem Helm muss in der Sprache des Landes, in dem er verkauft wird, eine Information geliefert werden, die klare Angaben darüber enthält:<br><br>a) dass der Helm nur schützen kann, wenn er richtig passt, und der Käufer sollte verschiedene Größen probieren und die Größe wählen, die fest und komfortabel auf dem Kopf sitzt;<br>b) dass der Helm so eingestellt werden muss, dass er dem Träger passt, z. B. müssen die Riemen so angebracht werden, dass sie nicht die Ohren bedecken, das Schloss darf nicht auf dem Kinn aufliegen, und die Riemen und das Schloss müssen sowohl komfortabel als auch fest eingestellt werden;<br>c) wie der Helm auf dem Kopf sitzen sollte, damit der beabsichtigte Schutz sichergestellt ist (z. B. dass er so aufgesetzt werden sollte, dass die Stirn geschützt ist und er nicht zu weit nach hinten über den Hinterkopf geschoben werden sollte);<br>d) dass ein Helm nicht immer vor Verletzungen schützen kann;<br>e) dass ein Helm ausgewechselt und vernichtet werden sollte, wenn er einem heftigen Stoß ausgesetzt war;<br>f) eine Erklärung hinsichtlich der Gefahr der Veränderung oder Entfernung von Originalteilen des Helmes entgegen der Empfehlung des Herstellers und dass Helme nicht verändert werden sollten, um Zusätze in einer nicht vom Hersteller empfohlenen Weise anzubringen.<br>*With every helmet clear information in the language of the country of sale shall be given as follows:*<br><br>*a) that the helmet can only protect if it fits well and that the buyer should try different sizes and choose the size which feels secure and comfortable on the head;*<br>*b) that the helmet should be adjusted to fit the user, e.g. the straps positioned so that they do not cover the ears, the buckle positioned away from the jawbone and the straps and buckle adjusted to be both comfortable and firm;*<br>*c) how the helmet should be positioned on the head to ensure the intended protection is provide (e.g. that it should be placed so as to protect the forehead and not be pushed too far over the back of the head);*<br>*d) that a helmet cannot always protect against injury;*<br>*e) that a helmet subjected to a severe impact should be discarded and destroyed;*<br>*f) a statement of the danger of modifying or removing any of the original component parts of the helmet other than as recommended by the manufacturer, and that helmets should not be adapted for the purpose of fitting accessories in a way not recommended by the manufacturer.* | | |
| | | Die Gebrauchsanleitung entspricht den Anforderungen (s. Beispiel in der internen TÜV-Akte).<br><br>The information supplied by the manufacturer meets the requirements (see example in the internal TÜV file). | P ☒<br>F ☐<br>N/A ☐<br>N/T ☐ |

TÜV RHEINLAND (GUANG DONG) LTD. TÜVRheinland

| Absatz | EN 1078: 2012+A1:2012 | Messergebnisse - Bemerkungen | Bewertung |
|---|---|---|---|
| *Clause* | Anforderungen - Prüfungen / *Requirements - Tests* | *Measuring results - Remarks* | *Evaluation* |

**Anhang ZA**
**Zusammenhang zwischen dieser Europäischen Norm und den grundlegenden Anforderungen der EU-Richtlinie für Persönliche Schutzausrüstung**
*Annex ZA*
*Clauses of this European Standard addressing essential requirements or other provisions of the EU - Directive for personal protective equipment*

| **EU-Richtlinie 89/686/EWG, Anhang II**<br>*EU-Directive 89/686/EEC, Annex II* | | **Abschnitte dieser Europäischen Norm**<br>*Clauses of this European standard* |
|---|---|---|
| 1.2.1 | Gefährliche und störende Eigenschaften der PSA<br>*Absence of risks and other inherent nuisance factors* | 4.6.2, 4.6.6 |
| 1.2.1.3 | Höchstzulässige Behinderung des Benutzers<br>*Maximum permissible user impediment* | 4.3 |
| 1.3.2 | Leichtigkeit und Festigkeit der Konstruktion<br>*Lightness and design strength* | 5.4.2.1, 5.4.2.2, 5.4.2.3 |
| 1.4 | Informationsbroschüre des Herstellers<br>*Information supplied by the manufacturer* | 6, 7 |
| 2.1 | PSA mit Verstellsystem<br>*PPE incorporating adjustment systems* | 4.6.5 |
| 2.12 | PSA mit einer oder mehreren direkt oder indirekt gesundheits- und sicherheitsrelevanten Markierungen oder Kennzeichnungen<br>*PPE bearing one or more identification or recognition marks directly or indirectly relating to health and safety* | 6 |
| 3.1.1 | Stöße durch herabfallende oder herausgeschleuderte Gegenstände und durch Aufprall eines Körperteils auf ein Hindernis<br>*Impact caused by falling or projecting objects and collision of parts of the body with an obstacle* | 4.4 |

Die Übereinstimmung mit den Abschnitten dieser Norm (EN 1078:2012) ist eine Möglichkeit, die relevanten grundlegenden Anforderungen der betreffenden Richtlinie und der zugehörigen EFTA-Vorschriften zu erfüllen.
*Compliance with the clauses of this standard (EN 1078:2012) provides one means of conforming with the specific essential requirements of the Directives concerned and associated EFTA-regulations.*

TÜV RHEINLAND (GUANG DONG) LTD. TÜVRheinland

## ZUSATZ-DOKUMENTATION
## *ADDITIONAL DOCUMENTATION*

**Vorhersehbare Verwendung wurde betrachtet. Zurzeit liegen für das/die Produkt/e weder Schutzklauselverfahren an, noch ist ein erhöhtes Unfallaufkommen bekannt.**

Der vorhersehbare Gebrauch auf motorisierten Zweirädern wurde betrachtet. Der Hersteller schließt den Gebrauch auf motorisierten Zweirädern in seiner Gebrauchsinformation durch einen Warnhinweis aus.

***Foreseeable use was considered. Currently neither a safeguard clause procedure has been invoked nor is an increase in accidents known for this / these product (s).***

*The foreseeable use on motor vehicles has been considered. The manufacturer excludes the use on motor vehicles in the information supplied by the manufacturer by a warning hint.*

TÜV RHEINLAND (GUANG DONG) LTD. TÜVRheinland

**Produkte**
*Products*

TÜVRheinland®

| | | |
|---|---|---|
| **Prüfbericht - Nr.:**<br>*Test Report No.:* | **16064692 005**<br>**(Photo documentation)** | Seite 1 von 8<br>*Page 1 of 8* |

| | | | |
|---|---|---|---|
| **Auftraggeber:**<br>*Client:* | **Zhao Qing Bo Han Sports Company Ltd.**<br>**No. 2-1, Kang Tai Street, High-tech Zone, Zhaoqing City, Guangdong Province, P.R. China** | | |
| **Gegenstand der Prüfung:**<br>*Test Item:* | **Helme für Radfahrer und für Benutzer von Skateboards und Rollschuhen**<br>*Helmets for pedal cyclists and for users of skateboards and roller skates* | | |
| **Bezeichnung:**<br>*Identification:* | **siehe unter „Sonstiges“**<br>*Pls. see under “Other aspects”* | **Serien Nr.:**<br>*Serial No.:* | **Engineering sample** |
| **Wareneingangs - Nr.:**<br>*Receipt No.:* | **174089893** | **Eingangsdatum:**<br>*Date of receipt:* | **N/A** |
| **Zustand des Prüfgegenstandes bei Anlieferung:**<br>***Condition of the test item at delivery:*** | | **the sample is ok for testing and not damaged** | |
| **Prüfort:**<br>*Testing location:* | **TÜV Rheinland ( Guangdong) Ltd. Guangzhou Helmet Laboratory**<br>**Room 103, Building A, No. 11 Jingye 3rd Street, Yushu Industrial Park, Guangzhou Science City, Guangzhou 510663, P.R. China** | | |
| **Prüfgrundlage:**<br>*Test specification:* | **EN 1078 : 2012 + A1 : 2012** | | |
| **Prüfergebnis:**<br>*Test Result:* | **Der Prüfgegenstand entspricht oben genannter Prüfgrundlage(n).**<br>*The test item passed the a.m. test specification(s).* | | |
| **Prüflaboratorium:**<br>*Testing Laboratory:* | **TÜV Rheinland ( Guangdong) Ltd. Guangzhou Helmet Laboratory** | | |

**Sonstiges**/*Other Aspects:*

HB3-5 sizes (cm): 48-53 CM, 53-55 CM, 55-58 CM, 59-61 CM EPS: black

TÜV RHEINLAND (GUANG DONG) LTD. TÜVRheinland

| | | | | | |
|---|---|---|---|---|---|
| *Abkürzungen:* | *P(ass)* | *= entspricht Prüfgrundlage* | *Abbreviations:* | *P(ass)* | *= passed* |
| | *F(ail)* | *= entspricht nicht Prüfgrundlage* | | *F(ail)* | *= failed* |
| | *N/A* | *= nicht anwendbar* | | *N/A* | *= not applicable* |
| | *N/T* | *= nicht getestet* | | *N/T* | *= not tested* |

**Dieser Prüfbericht bezieht sich nur auf den o.g. Prüfgegenstand und darf ohne Genehmigung der Prüfstelle nicht auszugsweise vervielfältigt werden. Dieser Bericht berechtigt nicht zur Verwendung eines Prüfzeichens.**
*This test report relates to the a. m. test item. Without permission of the test centre this test report is not permitted to be duplicated in extracts. This test report does not entitle to carry any safety mark on this or similar products.*

**Picture 1 - 6: basic inspection for protection area, field of vision, etc.**

TÜV RHEINLAND (GUANG DONG) LTD.
TÜVRheinland

TÜV RHEINLAND (GUANG DONG) LTD
TÜVRheinland

**Picture 7 - 11: impact points**

TÜV RHEINLAND (GUANG DONG) LTD.
TÜVRheinland

TÜV RHEINLAND (GUANG DONG) LTD.
TÜVRheinland

**Picture 12: inside of helmet**

TÜV RHEINLAND (GUANG DONG) LTD.
TÜVRheinland

**Picture 13: retention system**

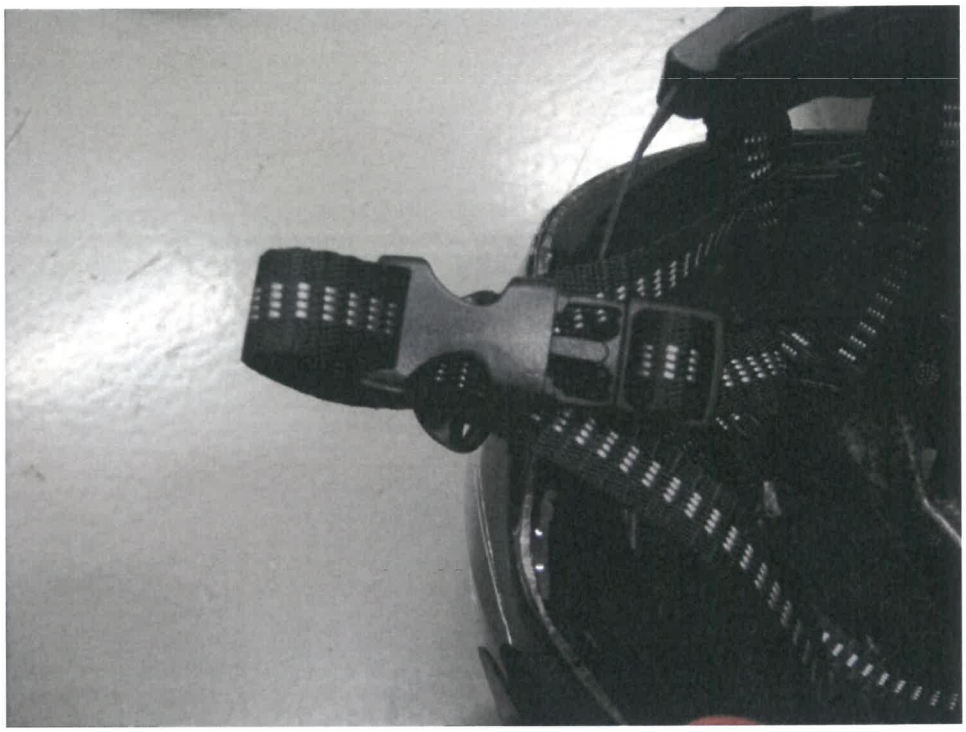

TÜV RHEINLAND (GUANG DONG) LTD.
TÜVRheinland

Order: 174089893 Date: 7/31/2018 Standard: EN 1078:2012+A1:2012
Ambient Temp.: 22*C Humidity: 60%
Operator: Reviewed by:

| Date/Time | Operator | Helmet Mode | Sa. | Cond. | Anvil Shape | Impact Point | Helmet Size | Peak | Speed | Sample No. | |
|---|---|---|---|---|---|---|---|---|---|---|---|
| 7/31/2018 | Jason pang | HB3-5 | 535 | +50*C | Kerb | Front | S/53-55 | 87 | 4.57 | 1 | positive |
| 7/31/2018 | Jason pang | HB3-5 | 535 | +50*C | Flat | Left | S/53-55 | 163 | 5.42 | 1 | positive |
| 7/31/2018 | Jason pang | HB3-5 | 535 | -20*C | Flat | Top | S/53-55 | 176 | 5.46 | 2 | positive |
| 7/31/2018 | Jason pang | HB3-5 | 535 | -20*C | Kerb | Front Right | S/53-55 | 137 | 4.59 | 2 | positive |
| 7/31/2018 | Jason pang | HB3-5 | 535 | Artificial ageing | Kerb | Rear | S/53-55 | 93 | 4.57 | 3 | positive |
| 7/31/2018 | Jason pang | HB3-5 | 535 | Artificial ageing | Flat | Left | S/53-55 | 144 | 5.42 | 3 | positive |
| 7/31/2018 | Jason pang | HB3-5 | 495 | +50*C | Kerb | Front | XS/48-53 | 92 | 4.57 | 5 | positive |
| 7/31/2018 | Jason pang | HB3-5 | 495 | +50*C | Flat | Left | XS/48-53 | 166 | 5.43 | 5 | positive |
| 7/31/2018 | Jason pang | HB3-5 | 495 | -20*C | Flat | Top | XS/48-53 | 182 | 5.42 | 6 | positive |
| 7/31/2018 | Jason pang | HB3-5 | 495 | -20*C | Kerb | Front Right | XS/48-53 | 100 | 4.61 | 6 | positive |
| 7/31/2018 | Jason pang | HB3-5 | 495 | Artificial ageing | Kerb | Rear | XS/48-53 | 95 | 4.61 | 7 | positive |
| 7/31/2018 | Jason pang | HB3-5 | 495 | Artificial ageing | Flat | Right | XS/48-53 | 174 | 5.43 | 7 | positive |
| 7/31/2018 | Jason pang | HB3-5 | 575 | +50*C | Kerb | Front | M/55-58 | 109 | 4.59 | 9 | positive |
| 7/31/2018 | Jason pang | HB3-5 | 575 | +50*C | Flat | Left | M/55-58 | 166 | 5.52 | 9 | positive |
| 7/31/2018 | Jason pang | HB3-5 | 575 | -20*C | Flat | Top | M/55-58 | 162 | 5.46 | 10 | positive |
| 7/31/2018 | Jason pang | HB3-5 | 575 | -20*C | Kerb | Front Right | M/55-58 | 115 | 4.57 | 10 | positive |
| 7/31/2018 | Jason pang | HB3-5 | 575 | Artificial ageing | Kerb | Rear | M/55-58 | 119 | 4.59 | 11 | positive |
| 7/31/2018 | Jason pang | HB3-5 | 575 | Artificial ageing | Flat | Right | M/55-58 | 185 | 5.51 | 11 | positive |
| 7/31/2018 | Jason pang | HB3-5 | 605 | +50*C | Kerb | Front | L/58-61 | 100 | 4.59 | 13 | positive |
| 7/31/2018 | Jason pang | HB3-5 | 605 | +50*C | Flat | Left | L/58-61 | 144 | 5.46 | 13 | positive |
| 7/31/2018 | Jason pang | HB3-5 | 605 | -20*C | Flat | Top | L/58-61 | 175 | 5.49 | 14 | positive |
| 7/31/2018 | Jason pang | HB3-5 | 605 | -20*C | Kerb | Front Left | L/58-61 | 100 | 4.59 | 14 | positive |
| 7/31/2018 | Jason pang | HB3-5 | 605 | Artificial ageing | Kerb | Rear | L/58-61 | 72 | 4.59 | 15 | positive |
| 7/31/2018 | Jason pang | HB3-5 | 605 | Artificial ageing | Flat | Right | L/58-61 | 147 | 5.49 | 15 | positive |

**Halteprüfung (Helmabstreiftest)/**
**Roll-off-test**

| Sample No. | | | | | |
|---|---|---|---|---|---|
| 1 | S/53-55 | 535 | 23 | with BLACK buckle | positive |

**Winkel der Verlagerung/**
**angle of movement**
**the helmet shall not come off the headform**

TÜV RHEINLAND (GUANG DONG) LTD. TÜVRheinland

| | | | | | |
|---|---|---|---|---|---|
| Order: | 174089893 | Date: | 7/31/2018 | Standard: | EN 1078:2012+A1:2012 |
| Ambient Temp.: | 22*C | Humidity: | 60% | | |
| Operator: | | Reviewed by: | | | |

| | | | | | |
|---|---|---|---|---|---|
| 5 | XS/48-53 | 495 | 21 | with BLACK buckle | positive |
| 9 | M/55-58 | 575 | 27 | with BLACK buckle | positive |
| 10 | L/58-61 | 605 | 25 | with BLACK buckle | positive |

| **dyn. Kinnriementest/ dyn. test of the retention system** | | | **dyn. Verlagerung/ dyn. Movement max. 35 mm** | **stat.Verlagerung/ stat.Movement max.25mm** | |
|---|---|---|---|---|---|
| 2 | S/53-55 | 535 | 28.9 | 18.3 | positive |
| 3 | S/53-55 | 535 | 27.1 | 15.3 | positive |
| 6 | XS/48-53 | 495 | **30.3** | 19.1 | positive |
| 7 | XS/48-53 | 495 | **31.5** | **20.3** | positive |
| 10 | M/55-58 | 575 | **30.0** | 18.9 | positive |
| 11 | M/55-58 | 575 | 22.6 | 11.4 | positive |
| 14 | L/58-61 | 605 | 26.3 | 15.4 | positive |
| 15 | L/58-61 | 605 | 22.2 | 10.2 | positive |

| **Sichtfeldermittlung/ field of vision** Sample No. | | | **Horizontalwinkel/ horiz. angle min. 210°** | **Winkeln.oben/ angleupwards min.25°** | **Winkeln.unten/ angledownwards min.45°** | |
|---|---|---|---|---|---|---|
| 1 | S/53-55 | 535 | >210 | 30 | Jet | positive |
| 5 | XS/48-53 | 495 | >210 | 30 | Jet | positive |
| 9 | M/55-58 | 575 | >210 | 30 | Jet | positive |
| 10 | L/58-61 | 605 | >210 | 30 | Jet | positive |

| **Chin strap width measurement** | **Width (min. 15mm)** | |
|---|---|---|
| | 16.0 | positive |

| **Helmet mass measurement** Sample No. | **Weight (g** S/53-55 | **Weight (g)** XS/48-53 | **Weight (g)** M/55-58 | **Weight (g)** L/58-61 |
|---|---|---|---|---|
| 1 | 239 | 213 | 273 | 296 |
| 2 | 237 | 211 | 277 | 290 |

TÜV RHEINLAND (GUANG DONG) LTD. TÜVRheinland

| | | | | | | | | | |
|---|---|---|---|---|---|---|---|---|---|
| Order: | 174089893 | Date: | | 7/31/2018 | | Standard: | EN 1078:2012+A1:2012 | | |
| Ambient Temp.: | 22*C | Humidity: | | 60% | | | | | |
| Operator: | | Reviewed by: | | | | | | | |
| 3 | 243 | | 215 | | 275 | | 298 | | |
| 4 | 248 | | 207 | | 270 | | 303 | | |
| Helmet mass | 240 | (round to neares | 210 | (round to near | 270 | (round to n | 300 | (round to nearest 10 g) | |

**Operation force of the automatic buckle according 4.6.7**

| helmet-/testhead-size | | | |
|---|---|---|---|
| | S/53-55 | 535 | open |
| | XS/48-53 | 495 | open |
| | M/55-58 | 575 | open |
| | L/58-61 | 605 | open |

Remark:
n.a.

TÜV RHEINLAND (GUANG DONG) LTD. TÜVRheinland

***Content***


| DOCUMENT | PAGE |
|---|---|
| Technical description | 2 |
| Assembly drawing | 3 |
| Material list of parts | 4 |
| Helmet section view | 5-8 |
| Constructional data | 9 |
| EPS details | 10-13 |
| Accessories | 14 |
| Label(s) | 15-16 |
| User manual | 17-18 |
| Helmet assembly pictures | 19 |


TÜV RHEINLAND (GUANG DONG) LTD. TÜVRheinland

INFORMATION DOCUMENT FOR EC TYPE EXAMINATION CERTIFICATE OF HELMETS FOR PEDAL CYCLISTS AND FOR USERS OF SKATEBOARDS AND ROLLER SKATES

| | | |
|---|---|---|
| 1. | Make (trade name or mark of the manufacturer) | : GOOD |
| | Commercial mark(s) | : MOON |
| 2. | Type | : HB3-5 |
| | Commercial description(s) | : --- |
| | Version | : --- |
| 3. | Sizes | : XS 48-53CM, S 53-55CM, M 55-58CM, L 59-61CM |
| 4. | Name and address of the applicant | : Zhao Qing Bo Han Sports Company Ltd. No. 2-1, Kang Tai Street, High-tech Zone, Zhaoqing City, Guangdong Province, P.R. China |
| 5. | Name and address of the manufacturer | : Zhao Qing Bo Han Sports Company Ltd. No. 2-1, Kang Tai Street, High-tech Zone, Zhaoqing City, Guangdong Province, P.R. China |
| 6. | Name and address of the manufacturer's representative | : not applicable |
| 7. | Brief description of the helmet | : Helmets for pedal cyclists and for users of skateboards and roller skates |
| 8. | Name and address of assembly plant | : Zhao Qing Bo Han Sports Company Ltd. No. 2-1, Kang Tai Street, High-tech Zone, Zhaoqing City, Guangdong Province, P.R. China |
| 9. | Applicable regulation | : Regulation 2016/425/EU and EN 1078:2012+A1:2012 |

TÜV RHEINLAND (GUANG DONG) LTD. TÜVRheinland

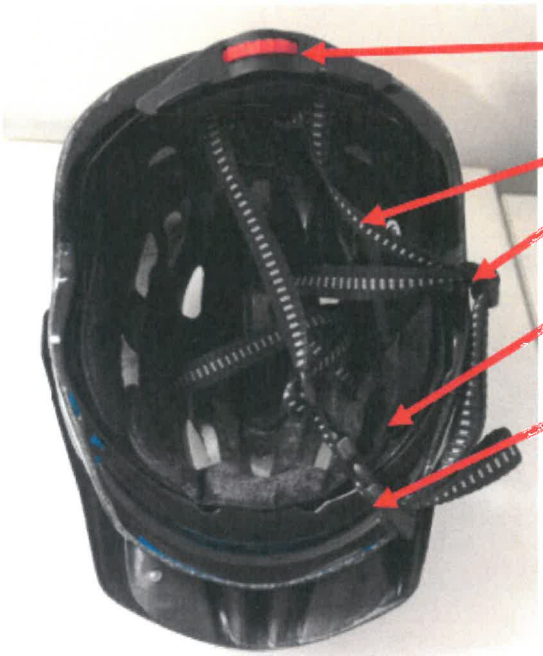


TÜV RHEINLAND (GUANG DONG) LTD. TÜVRheinland

| DRW. | HB3-5-01 | Assembly Drawing |
|---|---|---|

| Part No. | Subject or name | Material |
|---|---|---|
| 1 | Outer shell | PC |
| 2 | Inner EPS | EPS |
| 3 | Peak | ABS |
| 4 | Head lock | Nylon |
| 5 | Webbing | Nylon |
| 6 | Adjustor | Nylon |
| 7 | Inner pad | Textile |
| 8 | Buckle | Nylon |
| | | |
| | | |
| | | |
| | | |
| | | |

**Material list of parts**

TÜV RHEINLAND (GUANG DONG) LTD. TÜVRheinland

195MM

265MM

165MM

TÜV RHEINLAND (GUANG DONG) LTD. TÜVRheinland

| | | |
|---|---|---|
| DRW. | HB3-5-02 | Helmet section view (for SIZE XS) |

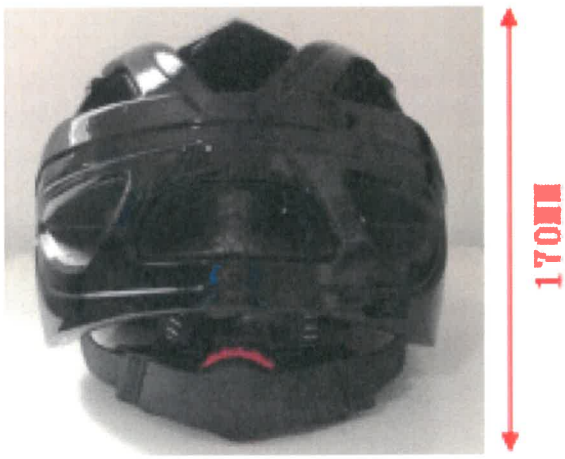


TÜV RHEINLAND (GUANG DONG) LTD.
TÜVRheinland

| | | |
|---|---|---|
| **DRW.** | **HB3-5-03** | **Helmet section view (for SIZE S)** |

220MM

290MM

180MM

TÜV RHEINLAND (GUANG DONG) LTD. TÜVRheinland

| | | |
|---|---|---|
| **DRW.** | **HB3-5-04** | **Helmet section view (for SIZE M)** |

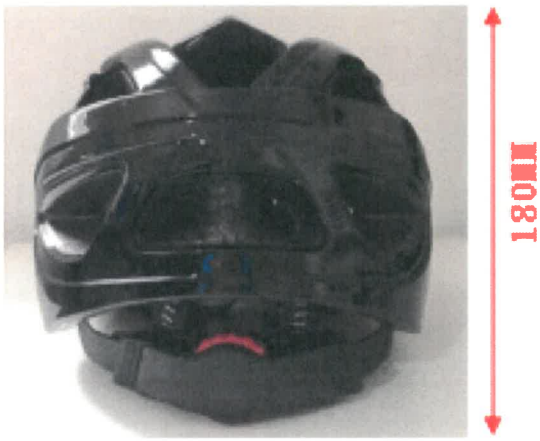


TÜV RHEINLAND (GUANG DONG) LTD.

| | | |
|---|---|---|
| **DRW.** | **HB3-5-05** | **Helmet section view (for SIZE L)** |

# Constructional Data

**1. Dimension of the shell (with Peak):**

| SIZE | Length (mm) | Width (mm) | Height (mm) |
|---|---|---|---|
| XS | 265 | 195 | 165 |
| S | 285 | 205 | 170 |
| M | 290 | 220 | 180 |
| L | 305 | 230 | 180 |

**Dimension of the shell (without Peak):**

| SIZE | Length (mm) | Width (mm) | Height (mm) |
|---|---|---|---|
| XS | 235 | 195 | 165 |
| S | 255 | 205 | 170 |
| M | 260 | 220 | 180 |
| L | 275 | 230 | 180 |

**2. Total weight of the helmet (with Peak):**

| Size | Weight (g) | Tolerance (g) |
|---|---|---|
| XS | 210 | ± 20 |
| S | 240 | ± 20 |
| M | 270 | ± 20 |
| L | 300 | ± 20 |

**3. Constructional details (without Peak):**

| Item | Length [mm] | Width [mm] | Height [mm] | Thickness [mm] | Material |
|---|---|---|---|---|---|
| Inner shell (for SIZE XS) | 235 | 195 | 165 | 70 g/l | EPS |
| Inner shell (for SIZE S) | 255 | 205 | 170 | 70 g/l | EPS |
| Inner shell (for SIZE M) | 260 | 220 | 180 | 70 g/l | EPS |
| Inner shell (for SIZE L) | 275 | 230 | 180 | 71.5 g/l | EPS |
| Inner shell (for SIZE XS) | 235 | 195 | 165 | 0.7 | PC |
| Inner shell (for SIZE S) | 255 | 205 | 170 | 0.7 | PC |
| Inner shell (for SIZE M) | 260 | 220 | 180 | 0.7 | PC |
| Inner shell (for SIZE L) | 275 | 230 | 180 | 0.7 | PC |
| Webbing | 1500 | 15 | 1 | 1 | Polyester fiber |
| Pads | 205 | 170 | 2 | 10 | Polyester fiber |
| Adjuster | 22 | 27 | 9 | 2 | Nylon |
| Buckle | 45 | 20 | 10 | 4 | Nylon |



TÜV RHEINLAND (GUANGDONG) LTD. TÜVRheinland

195MM

235MM

165MM

TÜV RHEINLAND (GUANG DONG) LTD. TÜVRheinland

**Remark: the outer shell and the inner shell are molded together.**

| | | |
|---|---|---|
| **DRW.** | **HB3-5-06** | **EPS details (for SIZE XS)** |

205MM

255MM

170MM

TÜV RHEINLAND (GUANG DONG) LTD.
TÜVRheinland

**Remark: the outer shell and the inner shell are molded together.**

| | | |
|---|---|---|
| **DRW.** | **HB3-5-07** | **EPS details (for SIZE S)** |

220MM

260MM

180MM

TÜV RHEINLAND (GUANG DONG) LTD. TÜVRheinland

**Remark: the outer shell and the inner shell are molded together.**

| | | |
|---|---|---|
| **DRW.** | **HB3-5-08** | **EPS details (for SIZE M)** |

230MM

275MM

180MM

**Remark: the outer shell and the inner shell are molded together.**

| | | |
|---|---|---|
| **DRW.** | **HB3-5-09** | **EPS details (for SIZE L)** |

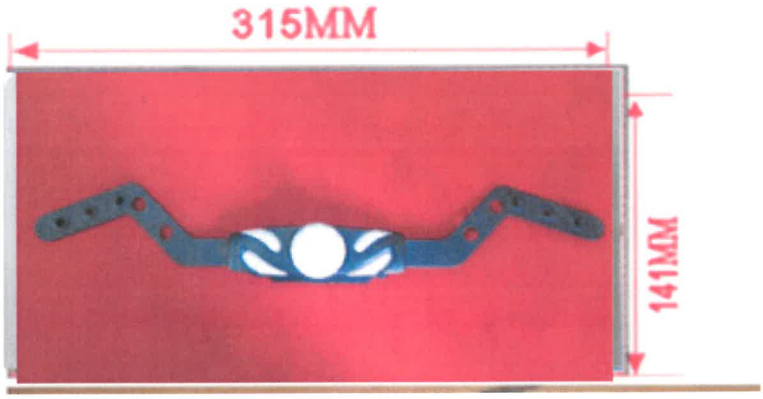

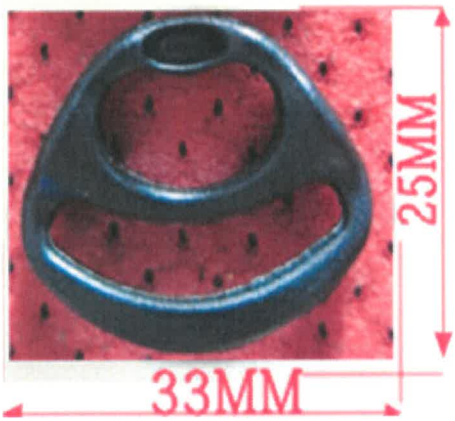

TÜV RHEINLAND (GUANG DONG) LTD. TÜVRheinland

| | | |
|---|---|---|
| DRW. | HB3-5-10 | Accessories |

Model: HB3-5
Size: XS (48-53CM)
Nominal Mass(with peak): 210g +/-20g
Manufacturer: Zhao Qing Bo Han Sports Company Ltd.
No. 2-1, Kang Tai Street, High-tech Zone, Zhaoqing City, Guangdong Province, P.R. China
Manufacture date:
2018-8-24

## Helmet for pedal cyclists, skateboarders or roller skates

CE
CONFORMS TO
EN 1078:2012+A1:2012

European Distributor:
Address:
Tel:

**WARNING**

<F
- For maximum protection,the helmet must be of good fit and all retention straps must be secure.
- This headgear is designed to absorb the energy of a severe blow through partial destruction of the shell and/ or lining. Even though damage may not be visible, the helmet should be replaced if such an impact occurs.

<R
Some impacts may surpass the helmet's ability to protect against severe injury or death.
- Make no modifications to this helmet as it may affect its protective capacity.

<O
- Some common substances can cause damage to the helmet, though it may not be visible to the user.The use of any solvents, paints of cleaning solutions can cause damage to the helmet and make it ineffctive in the result of an accident.

<N
This helmet should not be used by children while climbing or doing other activities when there is a risk of hanging if the child gets trapped with the helmet
This helmet is for pedal cy clists skate boarders or roller skaters.

<T
- NOT FOR MOTOR VEHICLE USE.

MADE IN CHINA DATE OF MANF.

Model: HB3-5
Size: S (53-55CM)
Nominal Mass(with pear): 240g +/-20g
Manufacturer: Zhao Qing Bo Han Sports Company Ltd.
No. 2-1, Kang Tai Street, High-tech Zone, Zhaoqing City, Guangdong Province, P.R. China
Manufacture date:
2018-8-24

## Helmet for pedal cyclists, skateboarders or roller skates

CE
CONFORMS TO
EN 1078:2012+A1:2012

European Distributor:
Address:
Tel:

**WARNING**

<F
- For maximum protection,the helmet must be of good fit and all retention straps must be secure.
- This headgear is designed to absorb the energy of a severe blow through partial destruction of the shell and/ or lining. Even though damage may not be visible, the helmet should be replaced if such an impact occurs.

<R
Some impacts may surpass the helmet's ability to protect against severe injury or death.
- Make no modifications to this helmet as it may affect its protective capacity.

<O
- Some common substances can cause damage to the helmet, though it may not be visible to the user.The use of any solvents, paints of cleaning solutions can cause damage to the helmet and make it ineffctive in the result of an accident.

<N
This helmet should not be used by children while climbing or doing other activities when there is a risk of hanging if the child gets trapped with the helmet
This helmet is for pedal cy clists skate boarders or roller skaters.

<T
- NOT FOR MOTOR VEHICLE USE.

MADE IN CHINA DATE OF MANF.

| DRW. | HB3-5-11 | Label(s) |
|---|---|---|



TÜV RHEINLAND (GUANG DONG) LTD. TÜVRheinland

Model: HB3-5
Size: M (55-58CM)
Nominal Mass(with pear): 270g +/-20g
Manufacturer: Zhao Qing Bo Han Sports Company Ltd.
No. 2-1, Kang Tai Street, High-tech Zone, Zhaoqing City, Guangdong Province, P.R. China
Manufacture date:
2018-8-24

## Helmet for pedal cyclists, skateboarders or roller skates

CE
CONFORMS TO
EN 1078:2012+A1:2012

European Distributor:
Address:
Tel:

**WARNING**

<F
<R
<O
<N
<T

- For maximum protection,the helmet must be of good fit and all retention straps must be secure.
- This headgear is designed to absorb the energy of a severe blow through partial destruction of the shell and/ or lining. Even though damage may not be visible, the helmet should be replaced if such an impact occurs. Some impacts may surpass the helmet's ability to protect against severe injury or death.
- Make no modifications to this helmet as it may affect its protective capacity.
- Some common substances can cause damage to the helmet, though it may not be visible to the user.The use of any solvents, paints of cleaning solutions can cause damage to the helmet and make it ineffctive in the result of an accident.

This helmet should not be used by children while climbing or doing other activities when there is a risk of hanging if the child gets trapped with the helmet
This helmet is for pedal cy clists skate boarders or roller skaters.

- NOT FOR MOTOR VEHICLE USE.

MADE IN CHINA DATE OF MANF.

Model: HB3-5
Size: L (59-61CM)
Nominal Mass(with pear): 300g +/-20g
Manufacturer: Zhao Qing Bo Han Sports Company Ltd.
No. 2-1, Kang Tai Street, High-tech Zone, Zhaoqing City, Guangdong Province, P.R. China
Manufacture date:
2018-8-24

## Helmet for pedal cyclists, skateboarders or roller skates

CE
CONFORMS TO
EN 1078:2012+A1:201

European Distributor:
Address:
Tel:

**WARNING**

<F
<R
<O
<N
<T

- For maximum protection,the helmet must be of good fit and all retention straps must be secure.
- This headgear is designed to absorb the energy of a severe blow through partial destruction of the shell and/ or lining. Even though damage may not be visible, the helmet should be replaced if such an impact occurs. Some impacts may surpass the helmet's ability to protect against severe injury or death.
- Make no modifications to this helmet as it may affect its protective capacity.
- Some common substances can cause damage to the helmet, though it may not be visible to the user.The use of any solvents, paints of cleaning solutions can cause damage to the helmet and make it ineffctive in the result of an accident.

This helmet should not be used by children while climbing or doing other activities when there is a risk of hanging if the child gets trapped with the helmet
This helmet is for pedal cy clists skate boarders or roller skaters.

- NOT FOR MOTOR VEHICLE USE.

MADE IN CHINA DATE OF MANF.

| DRW. | HB3-5-12 | Label(s) |
|---|---|---|



TÜV RHEINLAND (GUANG DONG) LTD. TÜVRheinland

## Final Check

The important thing to remember is that the helmet fits snugly. If you can fit it forward or backward you need to tighten the strap adjustment.

The straps should be positioned that they do not cover the ears and that the buckle is away from the jaw when correctly fitted.
Buyer should always try different sizes and choose the size which feel secure and comfortable on the head.

It is important for the helmet to fit snugly on your head and must be fastened to provide maximum protection.

All adjustments should be checked each time the helmet is worn, making sure it fits snugly at all times.

## Caring for Your Helmet

Clean the headgear with mild soap and water only. The use of any solvents, paints or decals can cause damage to the helmet and make it ineffective in the result of an accident.

## Keep Helmet Out of Extreme Heat

Helmets will be damaged if exposed to temperatures exceeding 150°F .Dark vehicles and storage bags can exceed this on very hot days,Heat damaged helmets will have random disfigured areas where the texture appears bubbly and uneven. If damaged, helmets should be destroyed andreplaced immediately.

## Important Information

This headgear is designed to absorb the energy of a blow by partial destruction or damage itself. Even though such damage may not be visible, the helmet should be destroyed or replaced, if it is involved in an injury- related fall.

Unfortunately, some accidents result in head injury that cannot be preventeb by ANY helmet . Depending on the type of impact,even very low speeds can result in a serious head injury or fatality. Always ride with extreme caution and be sure to read this manual thoroughly.

## Bicycle - Sports Helmets Warning

The Bicycle-Sports Safety Helmet is designed and intended exclusively for use while cycling, and other non- motorized sports. It is not intended for and will not provide adequate, safe protection if used during motorsport or moped use. No helmet can protect the wearer against all unforeseeable impacts. However, for maximum protection, the helmet must fit well and all retention straps must be securely fastened.

It's danger to modify or remove any of original component parts of the helmet other than as recommended by the manufacturer;
The helmet should not be adapted for the purpose of fitting accessories in a way not recommended by the manufacturer.

The helmet shall be replaced after 3 years, since the manufacture date.

For the used helmet disposal, please follow up the local disposal low for the waste product.

**BICYCLE - SPORTS**
**SAFETY HELMET**
**OWNERS MANUAL**

European Distributor:
Company name:
Company address:
Tel :

**THIS HELMET**
**MEETS,CE EN 1078:2012+A1:2012**
**HELMET STANDARDS**

Manufacturer:
Zhao Qing Bo Han Sports Company Ltd.
No. 2-1, Kang Tai Street, High-tech Zone,
Zhaoqing City, Guangdong Province,P.R. China

## IMPORTANT!

This helmet has passed EN1078:2012+A1:2012 to show conformity to the respectively Regulation EU 2016/425.
EU declaration of conformity will pack with product for sell.

EC TYPE EXAMINATION CERTIFICATE ISSUED BY:
TÜV Rheinland LGA Products GmbH
Tillystraße 2
90431 Nürnberg

NOTIFIED BODY REFERENCE No.0197

**PLEASE READ CAREFULLY BEFORE USING YOUR NEW HELMET**



TÜV RHEINLAND (GUANG DONG) LTD.
TÜVRheinland

The Bicycle-Sports Safety Helmet you have just purchased provides protection,whether on or off the road. To insure proper use of this helmet, familiarize yourself with its features, fit and care by carefully reading through this manual before wearing your new helmet.

## Protection and Ventilation

The outershell allows the helmet to be rated one of the lightest helmets while providing excellent durability and integrity. The multiple vents with inner air channels draw the air through the helmet and over the brow for maximum cooling.

## Pad Fitting

The helmet must fit properly to be effective. With a proper fit, the helmet will not move back and forth or side to side while fastened. If the helmet does not fit with installed pads, simply remove them and install a different size pad. To insure the proper fit, mix and match the pad thickness to best conform to your head shape.

## Retention System

This Bicycle-Sports Safety Helmet uses a quick-release buckle that is simple and can be buckled and unbuckled without changing the adjustment. The straps must be snugly and evenly tensioned. Place the helmet firmly on your head and fasten the buckle.

Notice which strap is loose. Tighten the loose strap after removing the helmet.

To tighten the chin strap,hold the buckle with one hand.Then pull the excess strap in through.(See Diagram A).

DIAGRAM A

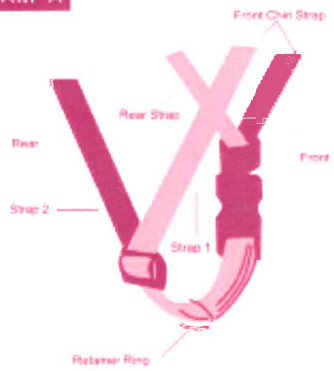


To tighten the rear strap,pull excess from the rear of strap 2.Hold the helmet with one hand.With the other hand,hold the strap where they pass under your chin.Then pull from side to side to balance the length of all four straps.(See Diagram B)

The helmet must sit firmly and level on your head. (See Diagram C)To lower the front of the helmet to cover your forehead,tighten the chin strap and loosen the rear strap.To raise the front,loosen the chin strap and tighten the rear strap.

To check fo proper tension,put on the helmet and fasten the buckle.Open your mouth.You should feel the strap pulling against your chin.

Then attempt to pull the helmet off the front or rear. If the helmet comes off,increase strap tension and examine if thick enough pads are being used .The helmet should not be able to roll forward or backward exces sively.It should not be possible to remove the helmet without unfastening the buckle.

**NOTE:** Please check adjustment every time this helmet is worn.

DIAGRAM B

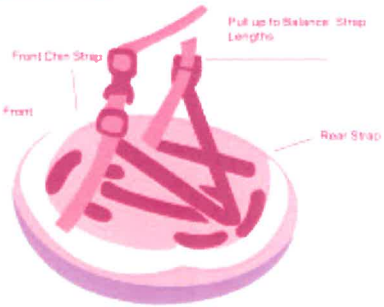


DIAGRAM C

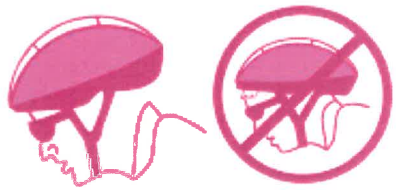

Correct Incorrect



TÜV RHEINLAND (GUANG DONG) LTD.

TÜV RHEINLAND (GUANG DONG) LTD.
TÜVRheinland

| | | |
|---|---|---|
| **DRW.** | **HB3-5-15** | **Helmet assembly pictures** |

Model: HB3-5
Size: XS (48-53CM)
Nominal Mass(with peak): 210g +/-20g
Manufacturer: Zhao Qing Bo Han Sports Company Ltd.
No. 2-1, Kang Tai Street, High-tech Zone, Zhaoqing City, Guangdong Province, P.R. China
Manufacture date:
2018-8-24

## Helmet for pedal cyclists, skateboarders or roller skates

CE
CONFORMS TO
EN 1078 2012+A1:2012

European Distributor:
Address:
Tel:

**WARNING**

<F
- For maximum protection,the helmet must be of good fit and all retention straps must be secure.
- This headgear is designed to absorb the energy of a severe blow through partial destruction of the shell and/ or lining. Even though damage may not be visible, the helmet should be replaced if such an impact occurs.

<R
Some impacts may surpass the helmet's ability to protect against severe injury or death.
- Make no modifications to this helmet as it may affect its protective capacity.

<O
- Some common substances can cause damage to the helmet, though it may not be visible to the user.The use of any solvents, paints of cleaning solutions can cause damage to the helmet and make it ineffctive in the result of an accident.

<N
This helmet should not be used by children while climbing or doing other activities when there is a risk of hanging if the child gets trapped with the helmet

<T
This helmet is for pedal cy clists skate boarders or roller skaters.
- NOT FOR MOTOR VEHICLE USE.

MADE IN CHINA DATE OF MANF.

Model: HB3-5
Size: S (53-55CM)
Nominal Mass(with pear): 240g +/-20g
Manufacturer: Zhao Qing Bo Han Sports Company Ltd.
No. 2-1, Kang Tai Street, High-tech Zone, Zhaoqing City, Guangdong Province, P.R. China
Manufacture date:
2018-8-24

## Helmet for pedal cyclists, skateboarders or roller skates

CE
CONFORMS TO
EN 1078 2012+A1:2012

European Distributor:
Address:
Tel:

**WARNING**

<F
- For maximum protection,the helmet must be of good fit and all retention straps must be secure.
- This headgear is designed to absorb the energy of a severe blow through partial destruction of the shell and/ or lining. Even though damage may not be visible, the helmet should be replaced if such an impact occurs.

<R
Some impacts may surpass the helmet's ability to protect against severe injury or death.
- Make no modifications to this helmet as it may affect its protective capacity.

<O
- Some common substances can cause damage to the helmet, though it may not be visible to the user.The use of any solvents, paints of cleaning solutions can cause damage to the helmet and make it ineffctive in the result of an accident.

<N
This helmet should not be used by children while climbing or doing other activities when there is a risk of hanging if the child gets trapped with the helmet

<T
This helmet is for pedal cy clists skate boarders or roller skaters.
- NOT FOR MOTOR VEHICLE USE.

MADE IN CHINA DATE OF MANF.

TÜV RHEINLAND (GUANGDONG) LTD. TÜVRheinland

2018-09-13

| DRW. | HB3-5-11 | Label(s) |
|---|---|---|

Model: HB3-5
Size: M (55-58CM)
Nominal Mass(with pear): 270g +/-20g
Manufacturer: Zhao Qing Bo Han Sports Company Ltd.
No. 2-1, Kang Tai Street, High-tech Zone, Zhaoqing City, Guangdong Province, P.R. China
Manufacture date:
2018-8-24

## Helmet for pedal cyclists, skateboarders or roller skates

CE
CONFORMS TO
EN 1078:2012+A1:2012

European Distributor:
Address:
Tel:

**WARNING**

<F
<R
<O
<N
<T

- For maximum protection,the helmet must be of good fit and all retention straps must be secure.
- This headgear is designed to absorb the energy of a severe blow through partial destruction of the shell and/ or lining. Even though damage may not be visible, the helmet should be replaced if such an impact occurs. Some impacts may surpass the helmet's ability to protect against severe injury or death.
- Make no modifications to this helmet as it may affect its protective capacity.
- Some common substances can cause damage to the helmet, though it may not be visible to the user.The use of any solvents, paints of cleaning solutions can cause damage to the helmet and make it ineffctive in the result of an accident.
- This helmet should not be used by children while climbing or doing other activities when there is a risk of hanging if the child gets trapped with the helmet
- This helmet is for pedal cy clists skate boarders or roller skaters.
- NOT FOR MOTOR VEHICLE USE.

MADE IN CHINA DATE OF MANF.

Model: HB3-5
Size: L (59-61CM)
Nominal Mass(with pear): 300g +/-20g
Manufacturer: Zhao Qing Bo Han Sports Company Ltd.
No. 2-1, Kang Tai Street, High-tech Zone, Zhaoqing City, Guangdong Province, P.R. China
Manufacture date:
2018-8-24

## Helmet for pedal cyclists, skateboarders or roller skates

CE
CONFORMS TO
EN 1078:2012+A1 201

European Distributor:
Address:
Tel:

**WARNING**

<F
<R
<O
<N
<T

- For maximum protection,the helmet must be of good fit and all retention straps must be secure.
- This headgear is designed to absorb the energy of a severe blow through partial destruction of the shell and/ or lining. Even though damage may not be visible, the helmet should be replaced if such an impact occurs. Some impacts may surpass the helmet's ability to protect against severe injury or death.
- Make no modifications to this helmet as it may affect its protective capacity.
- Some common substances can cause damage to the helmet, though it may not be visible to the user.The use of any solvents, paints of cleaning solutions can cause damage to the helmet and make it ineffctive in the result of an accident.
- This helmet should not be used by children while climbing or doing other activities when there is a risk of hanging if the child gets trapped with the helmet
- This helmet is for pedal cy clists skate boarders or roller skaters.
- NOT FOR MOTOR VEHICLE USE.

MADE IN CHINA DATE OF MANF.

2018-09-19

| DRW. | HB3-5-12 | Label(s) |
|---|---|---|



TÜV RHEINLAND (GUANGDONG) LTD.

## Final Check

The important thing to remember is that the helmet fits snugly. If you can fit it forward or backward you need to tighten the strap adjustment.

The straps should be positioned that they do not cover the ears and that the buckle is away from the jaw when correctly fitted.
Buyer should always try different sizes and choose the size which feel secure and comfortable on the head.

a.

It is important for the helmet to fit snugly on your head and must be fastened to provide maximum protection.

All adjustments should be checked each time the helmet is worn, making sure it fits snugly at all times.

## Caring for Your Helmet

Clean the headgear with mild soap and water only. The use of any solvents, paints or decals can cause damage to the helmet and make it ineffective in the result of an accident.

## Keep Helmet Out of Extreme Heat

Helmets will be damaged if exposed to temperatures exceeding 150°F .Dark vehicles and storage bags can exceed this on very hot days,Heat damaged helmets will have random disfigured areas where the texture appears bubbly and uneven. If damaged, helmets should be destroyed andreplaced immediately.

## Important Information

This headgear is designed to absorb the energy of a blow by partial destruction or damage itself. Even though such damage may not be visible, the helmet should be destroyed or replaced, if it is involved in an injury- related fall.

e.

Unfortunately, some accidents result in head injury that cannot be preventeb by ANY helmet . Depending on the type of impact,even very low speeds can result in a serious head injury or fatality. Always ride with extreme caution and be sure to read this manual thoroughly.

## Bicycle - Sports Helmets Warning

d.

The Bicycle-Sports Safety Helmet is designed and intended exclusively for use while cycling, and other non- motorized sports. It is not intended for and will not provide adequate, safe protection if used during motorsport or moped use. No helmet can protect the wearer against all unforeseeable impacts. However, for maximum protection, the helmet must fit well and all retention straps must be securely fastened.

It's danger to modify or remove any of original component parts of the helmet other than as recommended by the manufacturer;
The helmet should not be adapted for the purpose of fitting accessories in a way not recommended by the manufacturer.

f.

The helmet shall be replaced after 3 years, since the manufacture date.

For the used helmet disposal, please follow up the local disposal low for the waste product.

2018-09-13

# BICYCLE - SPORTS SAFETY HELMET OWNERS MANUAL

European Distributor:
Company name:
Company address:
Tel :

TÜV RHEINLAND (GUANG DONG) LTD. TÜVRheinland

**THIS HELMET MEETS,CE EN 1078:2012+A1:2012 HELMET STANDARDS**

Manufacturer:
Zhao Qing Bo Han Sports Company Ltd.
No. 2-1, Kang Tai Street, High-tech Zone,
Zhaoqing City, Guangdong Province,P.R. China

## IMPORTANT!

This helmet has passed EN1078:2012+A1:2012 to show conformity to the respectively Regulation EU 2016/425.
EU declaration of conformity will pack with product for sell.

EC TYPE EXAMINATION CERTIFICATE ISSUED BY:

TÜV Rheinland LGA Products GmbH
Tillystraße 2
90431 Nürnberg

NOTIFIED BODY REFERENCE No.0197

**PLEASE READ CAREFULLY BEFORE USING YOUR NEW HELMET**

The Bicycle-Sports Safety Helmet you have just purchased provides protection,whether on or off the road. To insure proper use of this helmet, familiarize yourself with its features, fit and care by carefully reading through this manual before wearing your new helmet.

## Protection and Ventilation

The outershell allows the helmet to be rated one of the lightest helmets while providing excellent durability and integrity. The multiple vents with inner air channels draw the air through the helmet and over the brow for maximum cooling.

## Pad Fitting

b.

The helmet must fit properly to be effective. With a proper fit, the helmet will not move back and forth or side to side while fastened. If the helmet does not fit with installed pads, simply remove them and install a different size pad. To insure the proper fit, mix and match the pad thickness to best conform to your head shape.

## Retention System

This Bicycle-Sports Safety Helmet uses a quick-release buckle that is simple and can be buckled and unbuckled without changing the adjustment. The straps must be snugly and evenly tensioned. Place the helmet firmly on your head and fasten the buckle.

Notice which strap is loose. Tighten the loose strap after removing the helmet.

To tighten the chin strap,hold the buckle with one hand.Then pull the excess strap in through.(See Diagram A).

DIAGRAM A

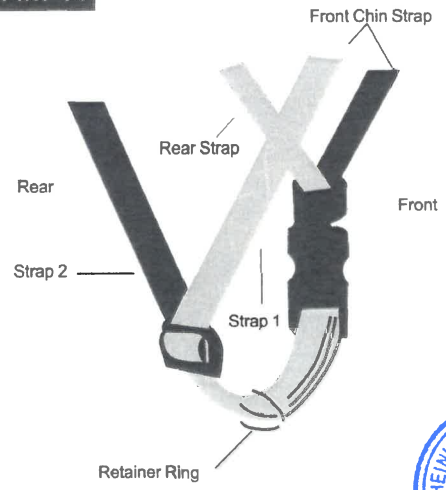


To tighten the rear strap,pull excess from the rear of strap 2.Hold the helmet with one hand.With the other hand,hold the strap where they pass under your chin.Then pull from side to side to balance the length of all four straps.(See Diagram B)

The helmet must sit firmly and level on your head. (See Diagram C)To lower the front of the helmet to cover your forehead,tighten the chin strap and loosen the rear strap.To raise the front,loosen the chin strap and tighten the rear strap.

c.

To check fo proper tension,put on the helmet and fasten the buckle.Open your mouth.You should feel the strap pulling against your chin.

Then attempt to pull the helmet off the front or rear. If the helmet comes off,increase strap tension and examine if thick enough pads are being used .The helmet should not be able to roll forward or backward exces sively.It should not be possible to remove the helmet without unfastening the buckle.

NOTE: Please check adjustment every time this helmet is worn.

DIAGRAM B

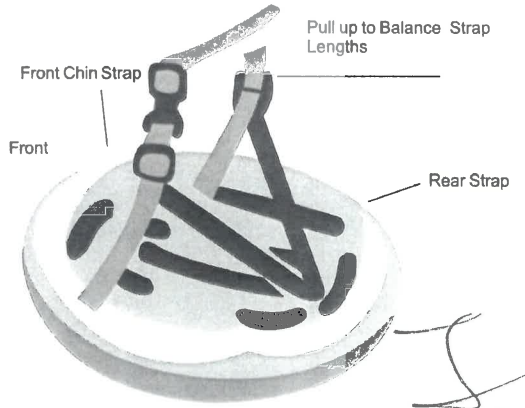


2018-03-13
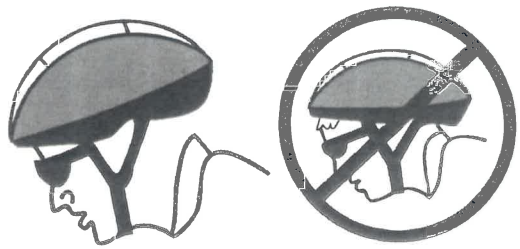
DIAGRAM C